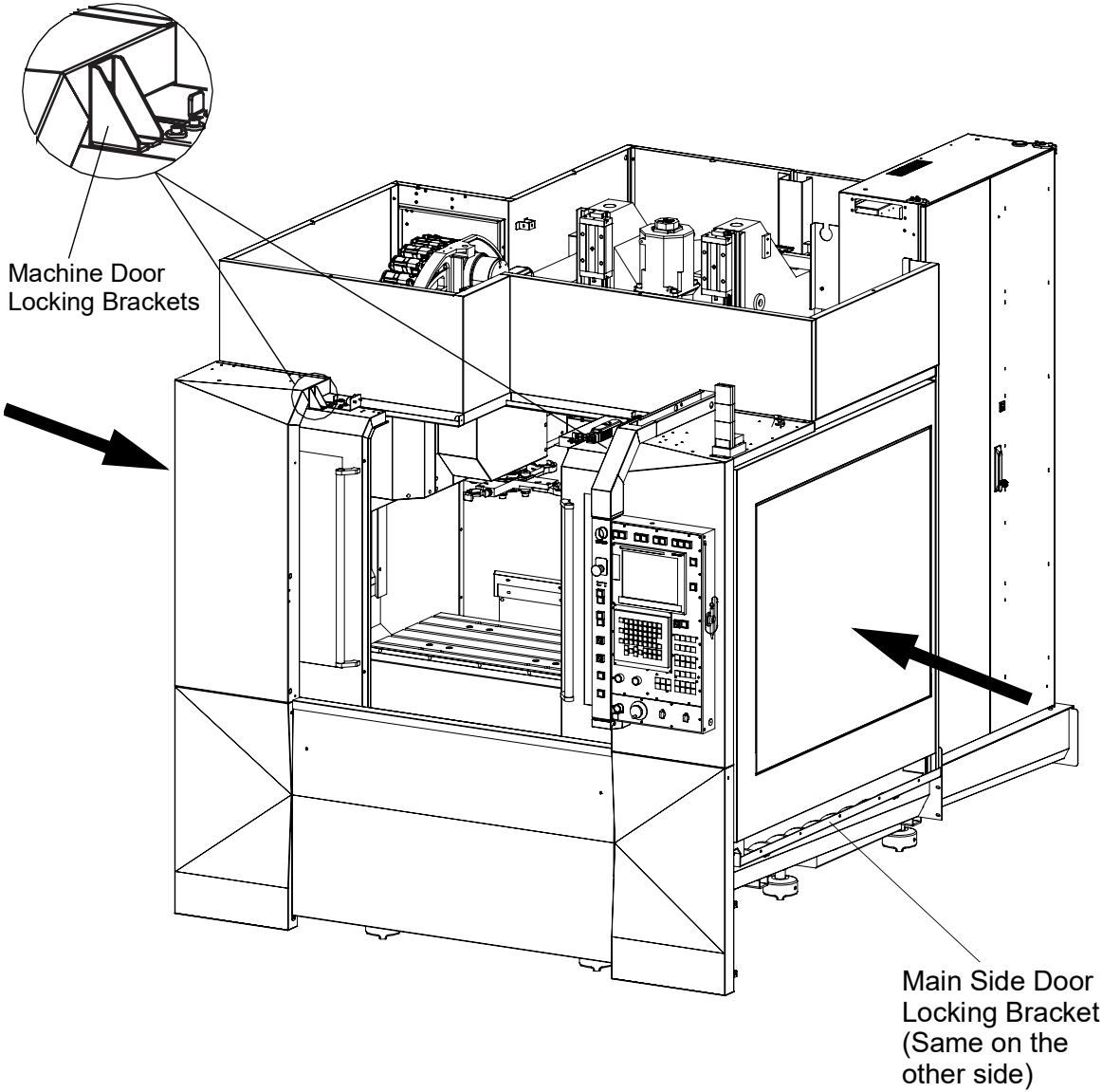
Machine Door
Locking Brackets
Main Side Door
Locking Bracket
(Same on the
other side)